Simplified Analytical Model for R.C. Columns Externally Strengthened with Steel Cages

Giuseppe Campione

Department of Civil, Environmental, Aerospatiale and Geotechnical Engineering,
The University of Palermo, Palermo 90128, Italy
studioingcampione@libero.it

***Abstract*-Equations for a hand computation of moment-axial forced domain of R.C. members externally strengthened with steel angles and strips are developed here. The analytical derivation was made assuming equivalent stress-block parameters for internal force considering the confinement effect induced in concrete core by external cages. Simple analytical equations are proposed on the basis of constitutive laws of confined concrete and steel angles recently developed by the author. The proposed model gives results in a good agreement with available experimental data and it allows one a hand control of the influence of main parameters governing the problems (angles and strips geometry and mechanical properties of constituent material) on the behaviour of R.C. columns externally strengthened with steel cages.**

Keywords- Concrete Columns; Strengthening; Steel Angles; Strips; Confinement; Moment-axial Force Domain

I. INTRODUCTION

Steel jackets around square or rectangular R.C. columns are usually made up of four corner steel angles to which either continuous steel plates or thicker discrete horizontal steel strips are welded. This reinforcing technique, if properly designed, increases both the load-carrying capacity and the ductility of the R.C. columns. Several design prescriptions are also given (see e.g. Penelis and Kappos 1997, Cirtek 2001, Eurocode 4 1994, Eurocode 8 2003, CEB-FIB 2003) [3-6, 10]. The case examined here is that of a concrete member of strength f_c and corresponding strain ε_0 with a square (of side b as shown in Fig. 1) or rectangular cross-section with side bxH strengthened with steel angles with side L_1, and thickness t_1 and with steel strips with height l_2 and thickness t_2 placed at a pitch s. The whole length of the column is L. f_{yb} is the yield stress of the steel strips and f_{ya} is the yield stress of the steel angles. The columns were subjected to the coupled effects of axial load N and bending moment M. Failure in the welded sections of steel strips and steel angles was not considered. Cases of directly and indirectly loaded angles were considered, also including second order effects.

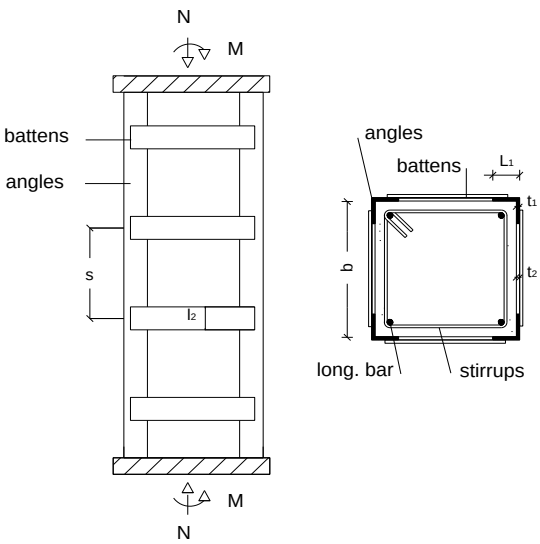

Fig. 1 Cases of study

The angles were assumed not to be bonded to the concrete and only made to adhere to it without gaps along the entire height. Also the presence of pre-existing of longitudinal bars of area in tension A_l and compression A'_l and transverse stirrups of diameter ϕ_{st} placed at pitch s_{st} were considered. f_{yl} is the yield stress of the longitudinal bars and f_{yst} is the yield stress of the stirrups. The effects of steel cage were analysed separately from the effect of pre-existing steel reinforcements and the superposition principle was applied to consider both the effects. Adopting the model of Badalamenti et al. (2010) it is possible to derive the stress-strain curves of confined concrete and compressed steel angles as shown in Fig. 2 [1]. These curves highlight the important role of the ratio s/b on the confinement of compressed concrete and on the stability of steel angles.

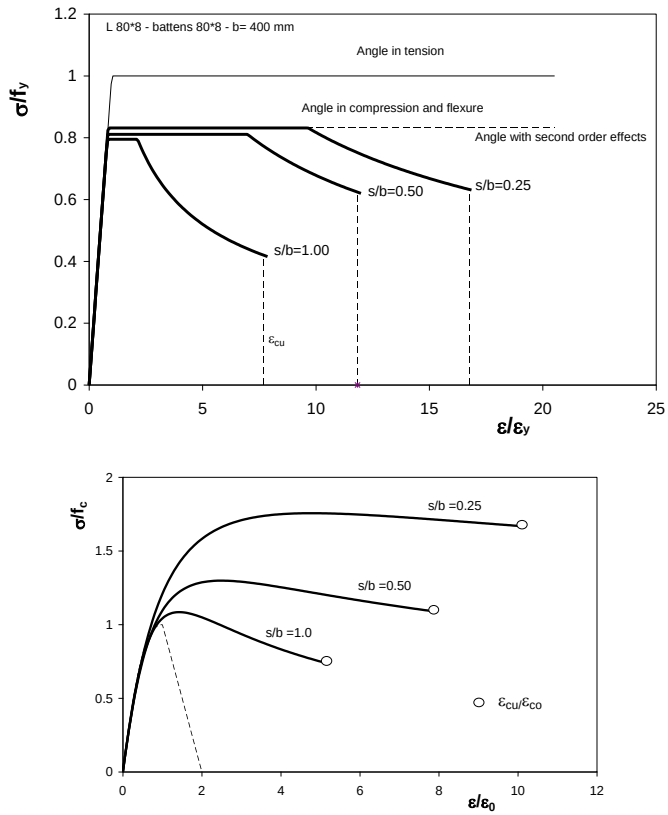

Fig. 2 Costitutive laws adepte in Badalamenti et al. (2010) for: a) steel angles; b) confined concrete core

Referring to design prescriptions Cirtek (2001) suggests, adopting this strengthening technique, to utilize equilateral angles having at least side 50 mm and thickness 5 mm and gives geometrical limitations for steel angles, which are - $L_1 \geq 0.2 \cdot b$; - $t_1 \geq 0.1 \cdot L_1 = 0.02 \cdot b$. Analogously for steel strips, it should be: $0.4 \leq \frac{s}{b} \leq 0.75$; $t_2 \leq t_1$; $l_2 \geq \frac{0.004 \cdot b^2}{t_2}$. Eurocode 8 (2003) prescribes that strips spacing should be at least b/2. Eurocode 4 (1994) gives the minimum and the maximum amount of reinforcement ratio (steel angles) to consider the strengthened R.C. member as a composite column. Eurocode 4 (1994) prescribes that the pitch of steel strips has to be reduced and the dimensionless slenderness should be lower than two to avoid buckling effects of steel angles.

II. ANALYTICAL MODEL FOR MOMENT-AXIAL FORCE DOMAIN

In this section a hand computation of moment axial-force domain is made adopting limit state theory. Analytical equations are developed referring to three main points of moment axial force domain corresponding to: pure compression; flexure; balanced failure under bending moment and axial force. Strain compatibility and the plain section remaining plane assumptions are made.

For the analytical derivation of moment axial force domain the stress-block shown in Fig. 3 is adopted. For angles and longitudinal bars in compression and in tension it was supposed that they have to be elastic or yielded while compressed concrete is always supposed crushed, therefore case of over reinforced section with not ductile behaviour was not considered here. The crushing of concrete was limited to a maximum axial strain of confined concrete ε_{cc} while, further ductility resources of columns ensured by larger available ultimate strain (ε_{cu} of Fig. 3) were not considered.

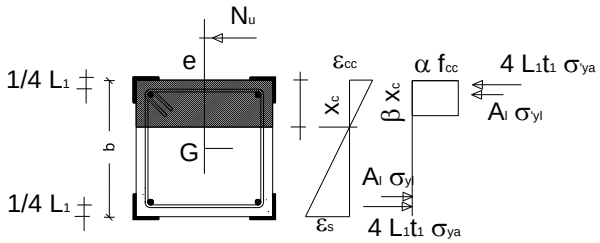

Fig. 3 Stress-block approach for moment-axial forces domain

A. Strain Compatibility Verification

The strain compatibility and the plain section remaining plane assumptions were adopted also if no bonding is provided between the steel cage and concrete. It is justified because of the high shear friction action acting at trips levels between concrete and steel cage.

The axial force arising in steel angels for the confinement effect can be expressed as:

$$N_{sd} = 2 \cdot \mu \cdot l_2 \cdot L_1 \cdot f_l \tag{1}$$

With μ the frictional coefficient between concrete and steel (assumed 0.5 as in Badalamenti et al. 2010) and f_{la} the maximum confinement pressure along the leg of the angle derived as:

$$f_{la} = \frac{2 \cdot t_2 \cdot l_2 \cdot f_{yb}}{L_1 \cdot s} \tag{2}$$

Therefore, if the axial force N_{sd} induced by friction between steel cage and concrete is higher than yielding axial force N_{rd} strain compatibility is ensured between steel angels and concrete and yield occurs. Maximum axial force is therefore limited to allowable axial stress (see Fig. 3 and Table 1).

TABLE 1 CONSTITUTIVE LAWS FOR CONFINED CONCRETE AND STEEL ANGLES

Confinement pressures expressions	
Stress-strain curves (Mander et al. 1988) [8]	Peak stress and peak strain as in Campione (2012) [2].
$\sigma_c = \dfrac{\dfrac{\varepsilon}{\varepsilon_{cc}} \cdot f_{cc} \cdot r}{r - 1 + \left(\dfrac{\varepsilon}{\varepsilon_{cc}}\right)^r}$ $r = \dfrac{E_c}{E_c - \dfrac{f_{cc}}{\varepsilon_{cc}}}$	$\dfrac{f_{cc}}{f_c} = 1 + 3.7 \cdot \left(\dfrac{f_l}{f_c}\right)^{0.87}$ $f_l = \dfrac{2 \cdot t_2 \cdot s_2 \cdot f_{yb}}{b \cdot s} \cdot e^{\left(-1.5 \cdot \frac{s}{b}\right)}$ $\dfrac{\varepsilon_{cc}}{\varepsilon_o} = \left\{1 + 5 \cdot \left[1 + \dfrac{f_l}{f_{cc}}\right]\right\}$
	Ultimate strain of confined concrete (Mander and Priesltey 1995 [11])
	$\varepsilon_{cu} = 0.004 + \dfrac{1.4 \cdot \varepsilon_{su} \cdot 2 \cdot s_2 \cdot t_2}{f_{cc} \cdot s \cdot b}$
Steel angles as in Badalamenti et al. (2010)	
$\sigma = E_s \cdot \varepsilon$ $\varepsilon < \varepsilon_y$ $\sigma = n_a \cdot f_y$ $\varepsilon > \varepsilon_y$	$n_a = \dfrac{1}{2 \cdot L_1 \cdot t_1 \cdot f_{yad}}$ $\times \sqrt{t_1 \cdot f_{yad} \cdot \left(t_1 \cdot f_{yad} \cdot L_1^2 - 0.155 \cdot \dfrac{4 \cdot t_2 \cdot s_2}{s \cdot b} \cdot f_{ybd} \cdot e^{\left(-1.5 \cdot \frac{s}{b}\right)} \cdot L_1 \cdot s^2\right)} \le 1$

The maximum axial force in steel N_{rd} is the yielding force of steel angle in tension

$$N_{rd} = 2 \cdot L_1 \cdot t_1 \cdot f_{ya} \tag{3}$$

By assuming $N_{sd}=N_{rd}$ and solving Eq. (2) and Eq. (3) with respect to f_l it results f_{lmin}:

$$f_{la\min} = \frac{2 \cdot t_1 \cdot f_{ya}}{l_2} \tag{4}$$

Finally, substituting f_l given by Eq. (2) into Eq. (4) and solving with respect to l_2 it results:

$$l_{2\min} = \sqrt{\frac{t_1}{t_2} \cdot \frac{f_{ya}}{f_{yb}} \cdot L_1 \cdot s} \tag{5}$$

Therefore, adopting a width of strip higher than value given by Eq. (5) the strain compatibility is ensured. For example if

we assume b= 400 mm, s=0.5 b, t_1=t_2, f_{yb}=f_{ya}, L_1=0.2 b it results l_2= 127 mm, which is a possible value of width of strips to produce effective confinement action (Cirtek, 2001).

B. Stress-Block Parameters

For confined concrete the stress-strain model of Badalamenti et al. (2010) and Campione (2012) was adopted. Expressions for peak stress f_{cc} and corresponding strain ε_{cc} of confined concrete deduced on the basis of the maximum confinement pressures f_l are those given in Table 1.

Stress-block parameters were here adopted to define compressive strength of confined concrete and neutral axis depth βx_c (see Fig. 2). The stress block parameters were found as made in Karthik and Mander (2011) [12], from taking the first and the second moments of area of the stress strain relations which lead to the following results:

$$\alpha \cdot \beta = \frac{\int_o^{\varepsilon_{cc}} \sigma \cdot d\varepsilon_c}{f_{cc} \cdot \varepsilon_{cc}} \tag{6}$$

$$\beta = 2 \cdot \left(1 - \frac{\int_o^{\varepsilon_{cc}} \sigma \cdot \varepsilon \cdot d\varepsilon_c}{\varepsilon_c \cdot \int_o^{\varepsilon_{cc}} \sigma \cdot d\varepsilon_c} \right) \tag{7}$$

For the analytical prediction of moment axial force domain β and α parameters were calculated with the following simplified expressions:

$$\beta = 0.8815 - 0.0884 \cdot \frac{s}{b} \quad \text{and} \quad \alpha \cong 0.93 \tag{8}$$

The expressions given in Eq. (8) were derived by using Eq. (6) and Eq. (7) and assuming the constitutive laws given in Badalamenti et al. (2010) and calculating the values of α and β giving the best fitting. Fixed values of s/b Cirtek (2001) prescriptions were adopted.

C. Case of Pure Compression

Under pure compression and if buckling of longitudinal and steel angles does not occur justified after a preliminary verification with the procedure proposed in Campione (2012), it results the ultimate axial force in steel angle expressed by means of:

$$N_u = f_{cc} \cdot b \cdot H + n_a \cdot 8 \cdot L_1 \cdot t_1 \cdot f_{ya} + A_1 \cdot f_{yl} + A_l^{'} \cdot f_{yl} \tag{9}$$

with n_a given in Table 1.

D. Case of Axial Force and Bending Moment

Under pure flexure or under axial force and bending moment several cases can be verified at failure depending of the axial force level and on the mechanical ratio of main steel bars and angles. Main cases to be examined are those of: concrete crushing with compressed angles in elastic range and steel angles in tension to be yielded; concrete crushing and angles in compression and in tension both to be yielded, and finally, concrete crushing with angle in compression to be yielded and angle in tension in elastic phase.

If compressed concrete is supposed crushed with referenced to the cross-section analysis shown in Fig. 2 the equilibrium equation of internal forces gives:

$$N_u = \beta \cdot x_c \cdot b \cdot \alpha \cdot f_{cc} + (4 \cdot L_1 \cdot t_1) \cdot \sigma^{'}_{\sigma a} + A_l \cdot \sigma^{'}_{yl} - (4 \cdot L_1 \cdot t_1) \cdot \sigma_{ya} - A_l \cdot \sigma_{yl} \cdot \tag{12}$$

$$\begin{aligned} M_u = N_u \cdot e = (\alpha \cdot f_{cc} \cdot \beta \cdot x_c \cdot b) \cdot \left(\frac{H}{2} - \frac{\beta \cdot x_c}{2} \right) + (4 \cdot L_1 \cdot t_1) \cdot \left(\frac{H}{2} - \frac{1}{4} \cdot L_1 \right) \cdot \sigma^{'}_{ya} \\ + A_l \cdot f_{yl} \cdot \left(\frac{H}{2} - c \right) + (4 \cdot L_1 \cdot t_1) \cdot \left(\frac{H}{2} - \frac{3}{4} \cdot L_1 \right) \cdot \sigma_{ya} + A_l \cdot \sigma_{yl} \cdot \left(\frac{H}{2} - c \right) \end{aligned} \tag{13}$$

Being σ_{ya} and σ_{yl} the stress in the angles and longitudinal bars in compression, and σ_{ya} and σ_{yl} the stress in the angles and longitudinal bars in tension.

If balanced failure occurs it results:

$$\left(\frac{x_c}{H}\right)_b = \frac{\varepsilon_{cc}}{\varepsilon_y + \varepsilon_{cc}} \cdot \left(1 - \frac{3}{4} \cdot \frac{L_1}{H}\right) \tag{14}$$

If we assume the balanced failure steel angles and steel bars are yielded and Eqs. (12), (13) become:

$$N_u = \beta \cdot x_c \cdot b \cdot \alpha \cdot f_{cc} \tag{17}$$

$$\begin{aligned} M_u = N_u \cdot e = (\alpha \cdot f_{cc} \cdot \beta \cdot x_c \cdot b) \cdot \left(\frac{H}{2} - \frac{\beta \cdot x_c}{2}\right) + (4 \cdot L_1 \cdot t_1) \cdot \left(\frac{H}{2} - \frac{1}{4} \cdot \frac{L_1}{b}\right) \cdot f_{ya} + \\ (4 \cdot L_1 \cdot t_1) \cdot \left(\frac{H}{2} - \frac{3}{4} \cdot \frac{L_1}{b}\right) \cdot f_{ya} + (A_l + A_l^{'}) \cdot f_{yl} \cdot \left(\frac{H}{2} - c\right) \end{aligned} \tag{18}$$

If we substitute Eq. (14) into Eqs. (17)-(18) it results the axial force and the bending moment at balanced failure.

E. Pure Bending

In the case of pure bending supposing the compressed angle and steel bars to be elastic and steel angle and steel bar in tension to be yielded the strain in compressed angle and longitudinal bars can be expressed as:

$$\varepsilon'_a = \frac{\varepsilon_{cc} \cdot \left(x_c - \frac{1}{4} \cdot L_1\right)}{x_c} \quad \text{and} \quad \varepsilon'_l = \frac{\varepsilon_{cc} \cdot (x_c - c)}{x_c} \tag{19}$$

Therefore Eq. (12) and Eq. (13) become

$$\begin{aligned} (\beta \cdot b \cdot \alpha \cdot f_{cc}) \cdot x_c^2 + (4 \cdot L_1 \cdot t_1 \cdot \varepsilon_{cc} \cdot E_s - 4 \cdot L_1 \cdot t_1 \cdot f_{ya} + A_l \cdot f_{ya} + A_l^{'} \cdot \varepsilon_{cc} \cdot E_s) \cdot x_c \\ - L_1^2 \cdot t_1 \cdot \varepsilon_{cc} \cdot E_s + A_l^{'} \cdot \varepsilon_{cc} \cdot E_s \cdot c = 0 \end{aligned} \tag{20}$$

$$\begin{aligned} M_u = (\alpha \cdot f_{cc} \cdot \beta \cdot x_c \cdot b) \cdot \left(\frac{H}{2} - \frac{\beta \cdot x_c}{2}\right) + (4 \cdot L_1 \cdot t_1) \cdot \left(\frac{H}{2} - \frac{1}{4} \cdot L_1\right) \cdot E_s \cdot \frac{\varepsilon_{cc} \cdot \left(x_c - \frac{1}{4} \cdot L_1\right)}{x_c} \\ + A_l \cdot f_{yl} \cdot \left(\frac{H}{2} - c\right) + (4 \cdot L_1 \cdot t_1) \cdot \left(\frac{H}{2} - \frac{3}{4} \cdot L_1\right) \cdot f_{ya} + A_l \cdot E_s \cdot \frac{\varepsilon_{cc} \cdot (x_c - c)}{x_c} \cdot \left(\frac{H}{2} - c\right) \end{aligned} \tag{21}$$

III. ANALYTICAL VALIDATION OF PROPOSED EQUATIONS AND COMPARISON WITH EXPERIMENTAL DATA

Data of Garzon-Roca et al. (2010) [7] and Nagaspasad et al. (2009) [9] were utilised to validate the model. The first case examined is the one of Garzon-Roca et al. (2010) which refers to columns had square cross-section of external side 260 mm and they were reinforced with four 12 mm longitudinal bars and transverse stirrups of 6 mm in diameter at pitch 200 mm. Steel cage was constituted by four 60x6 mm steel angles with steel strips of 140 mm side and 8 mm thickness at pitch 182 mm. Specimens C-1000 a and C-1000 b had same geometry and they were subjected to a 1000 kN of axial force, while specimens C-300 a and C-300 b were subjected to 300 kN of axial force. The cylindrical compressive strength was 12 MPa and the yield stress of steel bars and steel cage was 500 and 275 MPa, respectively. The second case examined is the one of Nagaprasad et al. (2009). It refers to columns with rectangular cross-section of external 200x275 mm and height 1275 mm and they were reinforced with six ϕ 16 mm longitudinal bars and transverse stirrups of 8 mm in diameter at pitch 100 mm. Steel cage was constituted by four 35x5 mm steel angles with steel strips of 80 mm side and 6 mm thickness at pitch 235 mm. A constant axial force of 450 kN was applied. The cylindrical compressive strength was 25 MPa and the yield stress of steel bars and steel stirrups was 468, 438 MPa. The yield stress of angles and strips was 353 MPa and 330 MPa, respectively. Fig. 4 a) and Fig. 4 b) show comparison with experimental data. Also numerical validation with cross-section analysis on the basis if the constitutive laws adopted (see Fig. 2 and Table 1) is made. From comparison it emerges that the current model predicts in a good agreement the experimental results (Fig. 4).

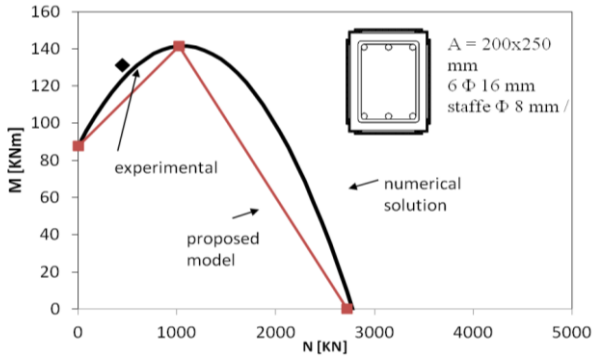

a)

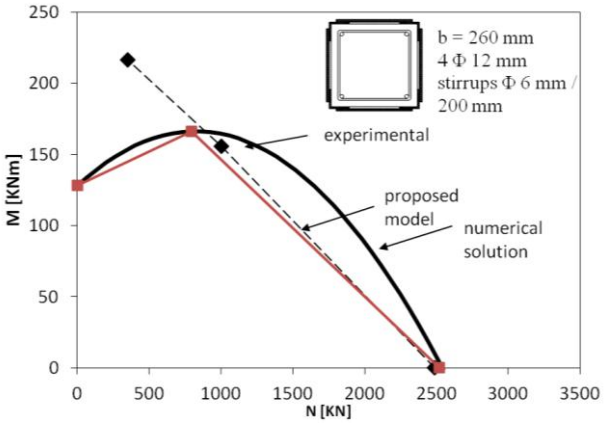

b)

Fig. 4 Comparison between analytical and experimental results: Data of Nagaspasad et al. (2009), b) Garzon-Roca et al. (2010)

IV. CONCLUSIONS

In the present paper an analytical model is derived for the hand computation of the axial force-bending moment domain of R.C. concrete columns externally strengthened with steel angles at the four corners and steel strips externally welded to the angles. The analytical expressions here adopted for the stress-strain responses of confined concrete and steel reinforcement (steel bars and steel angles in compression) are able to include confined effects induced by steel strips and angles subjected to bending moment and axial forces. Analytical results here generated by adopting stress-block are compared with experimental results available in the literature and with numerical results. Comparison shows good agreement and also stresses the importance of a hand calculation for the study of the influence of the geometrical and the mechanical properties of the strengthening devices (side and thickness of angles, depth, and thickness of steel strips) on the flexural response of strengthened columns.

ACKNOWLEDGEMENTS

This work has benefited from material derived the 2010-2013 Research Project ReLUIS (Rete dei Laboratori di Ingegneria Sismica), AT 1, Task 1.1.2: Strutture in Cemento Armato ordinarie e prefabricate.

REFERENCES

[1] Badalamenti V., Campione G. and Mangiavillano M.L. (2010). Simplified model for compressive behavior of concrete columns strengthened by steel angles and strips. *ASCE Journal of Engineering Mechanics*, 136(2): 230-238.

[2] Campione G. (2012). R.C. Columns Strengthened with Steel Angles and Strips: experimental Results and Design Procedure. *ASCE Practice Periodical on Structural Design and Construction* in press, doi:http://dx.doi.org/10.1061/(ASCE)SC.1943-5576.0000125.

[3] CEB-FIB. Seismic assessment and retrofit of reinforced concrete buildings. Bulletin no. 24, Task Group 7.1; 2003.

[4] Cirtek L. (2001). RC columns strengthened with bandage-experimental programme and design recommendations. *Construction and Building Materials* 15: 341-349.

[5] Eurocode 4 (1994) - ENV 1994-1-1. Design of composite steel and concrete structures. Part 1-1: General rules and rules for buildings.

[6] Eurocode 8 (2003) - Part 3. Design of structures for earthquake resistance Part3.

[7] Garzon-Roca J., Ruiz-Pinilla J. Adam J.M. Calderon P.A. (2010). An experimental study on steel-caged RC columns subjeceted to axial

force and bending moment. *Eng. Structural J.* 32: 580-590.

[8] Mander J.B., Priestley M.J.N. and Park R.(1988). Theoretical stress-strain model for confined concrete. *Journal of Struct. Engng. ASCE*, 114(8): 1804-1826.

[9] Nagasprasad P. SahooD.R. Rai D.C. (2009), Seismic strengthening of RC columns using external steel cage. *Earth. Eng. Stru.Dynamic*, 38(15): 1536-1586.

[10] Penelis G.G. and Kappos A.J. (1997), Earthquake resistant concrete structures E&Spoon, pp. 572.

[11] Priesltey 1. Paulay T, Priestley MJN. Seismic design of reinforced concrete and masonry buildings. John Wiley & Sons, In. 1992.

[12] Karthik M.M. and Mander J.B. (2011), Stress-block parameters for unconfined and confined concrete based on a unified stress-strain model. *Journal of Struct. Engng. ASCE*, 137(2): 270-273.